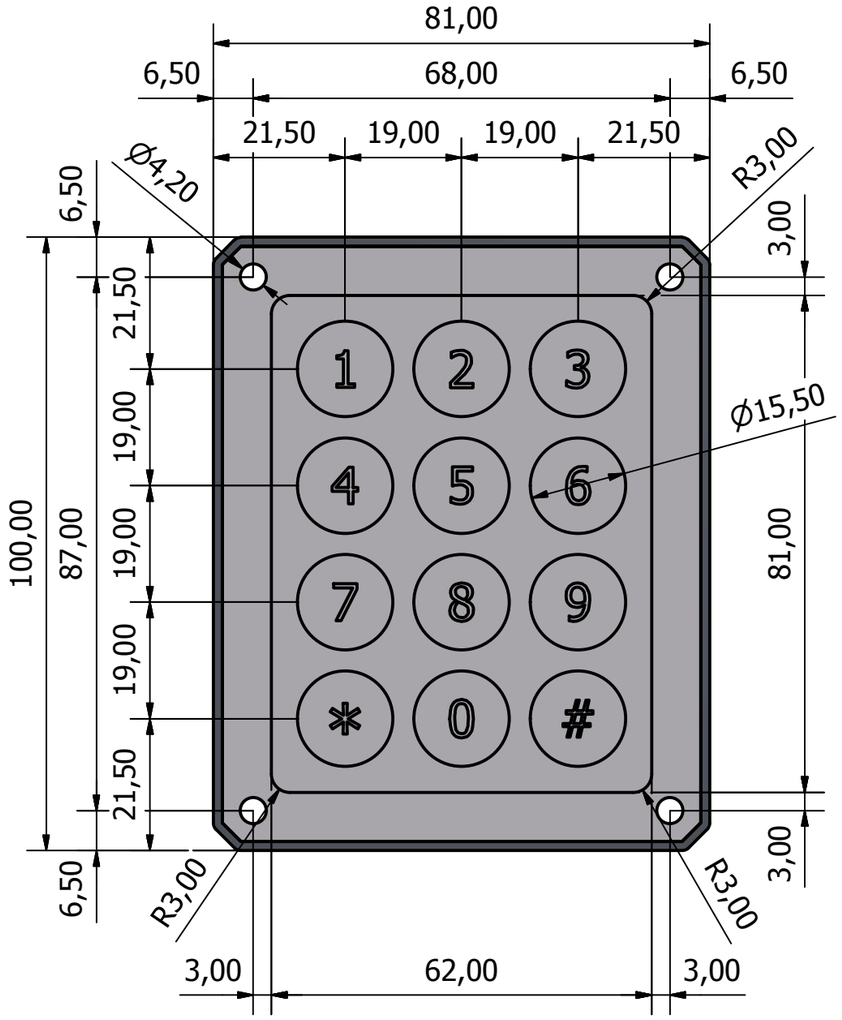

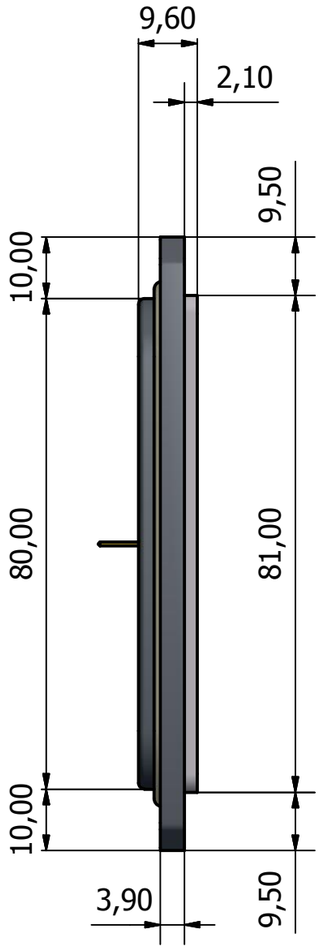

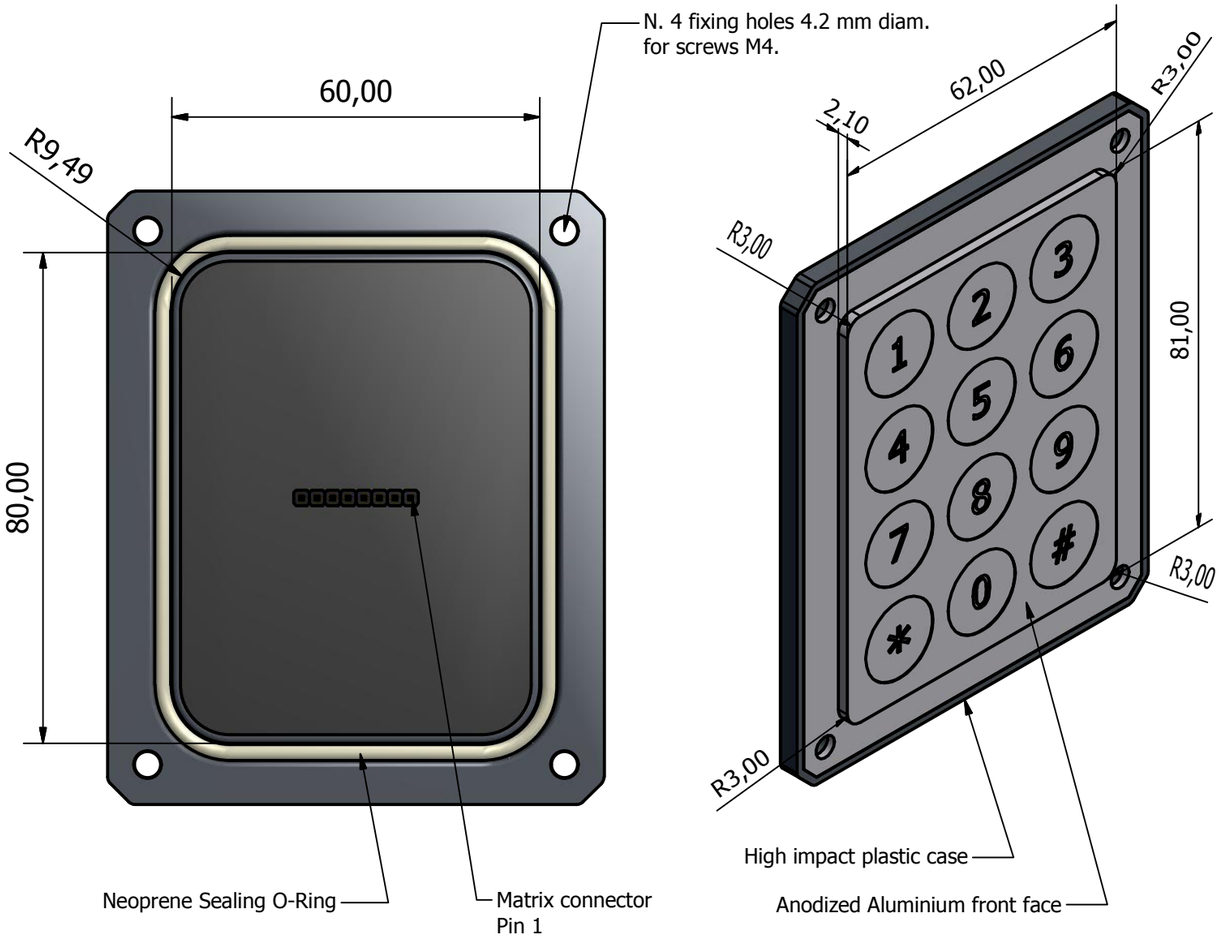

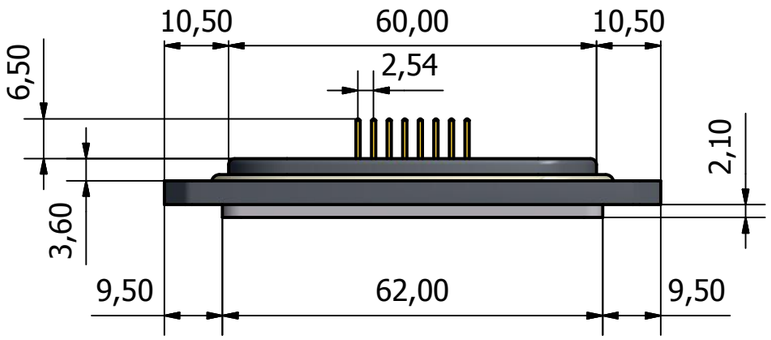

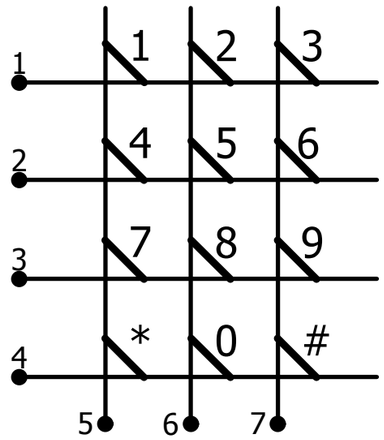

Matrix schematic diagram

Customer Panel Cut-Out
62,5 x 81,5 x n. 4 R=3,5
(Customer panel thickness 2,0 mm)

ZONA	REV	DESCRIZIONE	DATA	APPROVATO
	4			
	3			
	2			
	1			

CRONOLOGIA REVISIONI

THIS DRAW IS A RESERVED PROPERTY OF APEM ITALIA S.r.l.

All dimensions in mm unless otherwise stated
-DO NOT SCALE DRAWING-

TOLERANCES UNLESS OTHERWISE STATED: LINEAR ± 0,1 mm ANGULAR ± 30'

REPRODUCTION FORBIDDEN	DATE	SIGNATURE	DESCRIPTION
DRAWN	26/01/2012	P. Mollo	Series Piezo
CHECKED			T12PKAR - 4 x 3 Matrix
APPROVED			

APEM ITALIA S.r.l. via G. Marconi 147/G
12030 MARENE (CN) - ITALIA
Tel. +39.0172.743170
Fax. +39.0172.743171
apem.italia@apem.it
APEM.com

PART N. 59200003

59200003 .DWG

SCALE	REV.
1:1	0

SHEET	INDEX REF.	OF
1 / 1		